TECHNICAL EXCELLENCE. SINCE 1929.

EXTENSIONS

SERIES 4000

ART. 4315/S

type
Extension with automatic retraction

length
15

Cable type
PVC

V max
500



EN 61242
EN 60335-1
EN 61316

CE

2014/35/UE
2006/42/CE
2011/65/UE

TÜVNORD
TÜV NORD CERT GmbH
Baumuster geprüft

44

mm 360x310x185

TECHNICAL DATA

Article	Color	Description	Cable length (m)	Reel cable length (m)	Cut length (m)	Cable type	Indentation	Sockets	Wound cable capacity (@20°C)	Unwound cable capacity (@20°C)	Thermal switch	V max	Number conductors	Cable section
4315/S	Silver	Extension with automatic retraction	15	14	1	PVC	AUTOMATIC	NO	1200	1800	YES	500	3 G	1.5

Please note: The images are for illustrative and explanatory purposes only

OVERALL DIMENSIONS

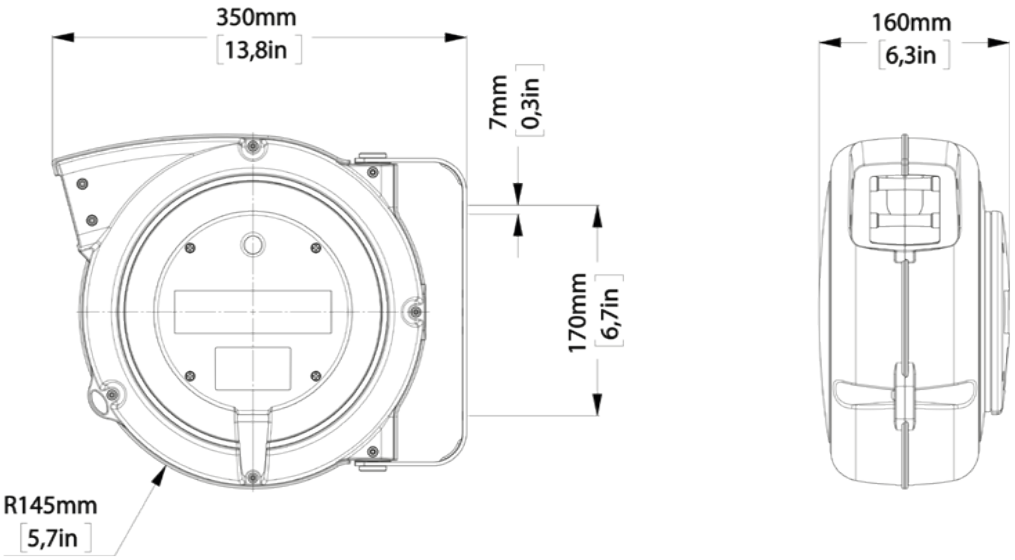

Technical features

Spring retracted cable reels, suitable for use as extensions, allow the user to always have a power outlet available.

- Adjustable bracket for fixing.
- Rack cable stop device, insertable every 50cm.
- Built-in thermal protector.
- Double ground contact.
- Ambient temperature of use: -5 / + 50 ° C.
- Zeca-patented custom collector.